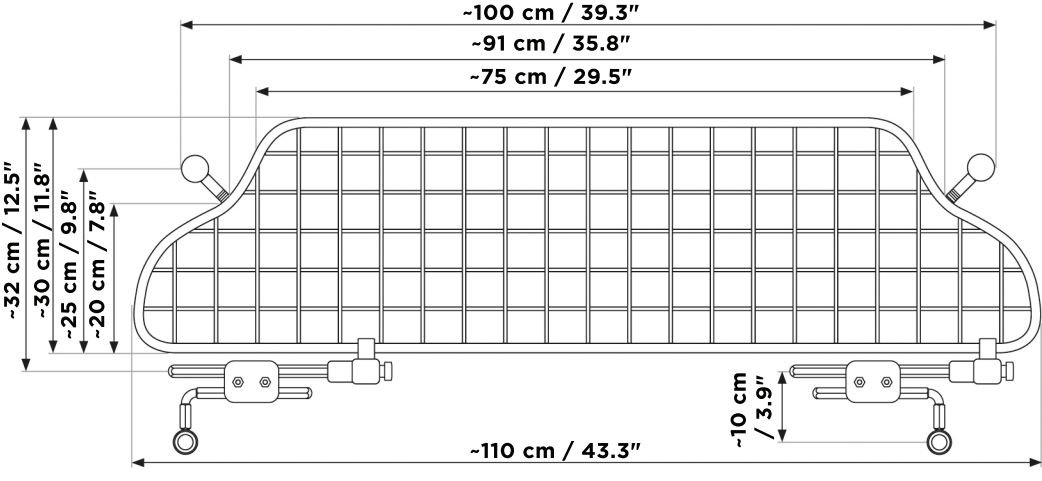
~100 cm / 39.3"
~91 cm / 35.8"
~75 cm / 29.5"
~32 cm / 12.5"
~30 cm / 11.8"
~25 cm / 9.8"
~20 cm / 7.8"
~10 cm / 3.9"
~110 cm / 43.3"